SPECIFICATION SHEET

Washington Vessel

Code: 7384

Features

- Material: Mineral Composite
- Bowl Position: Centre
- Gloss White Finish
- Net Weight: 8kg
- Gross Weight: 8.8kg
- Dimensions: 600L x 360W x 150H
- *Match with the Washington Freestanding Bath*

Technical Details

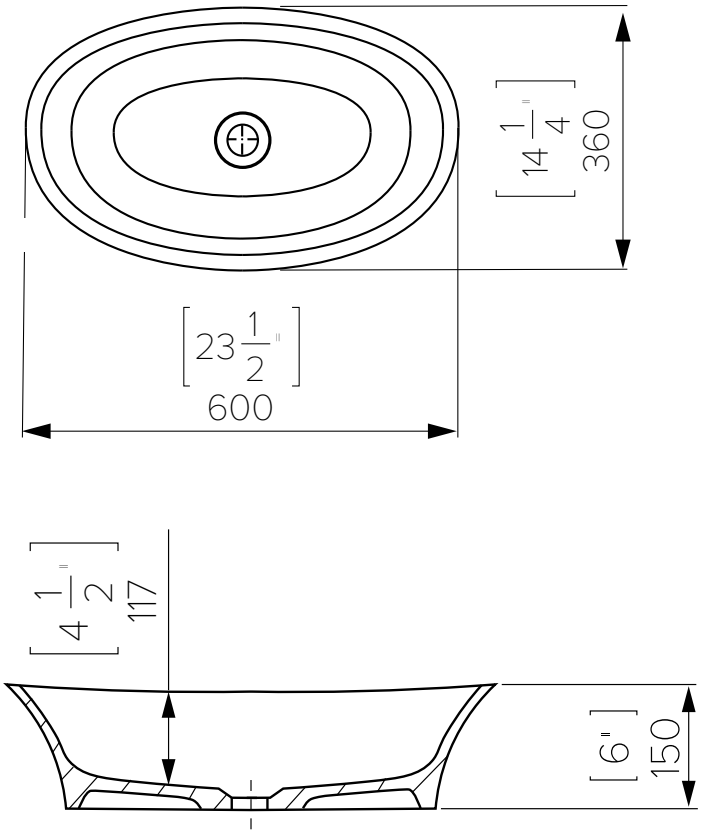

newtech
BATHROOMWARE DESIGN ■ INNOVATION

Head Office: 281 Heads Road, Wanganui
Auckland Office: 525 Great South Road, Penrose, Auckland
06 349 0194 | 0800 728 662
www.newtech.co.nz