209 Series Basin Mixer

Product Code: T209BM, T209BMN, T209BMBN, T209GM, T209BMBB

Features

- Mains pressure only
- Available Colours: Brushed Bass, Brushed Nickel, Mixer Gunmetal, Mixer Noir
- Quality cast brass body
- Low lead brass (potable water products)
- Reliable Kerox ceramic cartridges
- High quality electroplate finish
- 10 workmanship year warranty
- Watermark certification/ WELS rating as applicable

Technical Details

Depth 151mm, Height 158mm, Spout 113mm

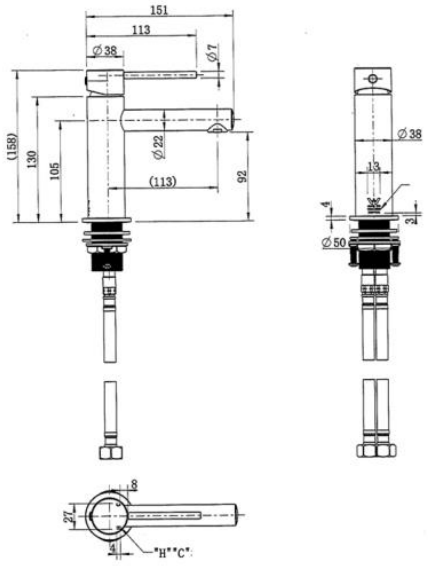

Note: all specifications and dimensions are correct at time of publication however are subject to change without notice. Please refer to physical product prior to installation.

HEIRLOOM THE FINISHING TOUCH

the tile depot